Rigid Stem

7" • 9" • 12" Scale Sizes

INDUSTRIAL THERMOMETERS

BX12403 shown

- **7", 9", 12" Scale**
- **± 1 Scale Division Accuracy**
- **Cast Aluminum Case**
- **Rigid Straight or Rigid 90° Angle Case**

The **Rigid Stem Industrial Thermometer** is offered for applications where a non-adjustable case is preferred. The durable cast aluminum case is available in rigid straight or rigid 90° angle forms. This thermometer features accuracy, responsiveness and durability.

- Optional features available: Please consult the Options & Accessories Section for details.

Thermowell

- For applications where the process media may be corrosive or contained under pressure, the use of a thermowell is required to prevent damage to the thermometer and facilitate its removal from the process. (Refer to page 152)

Specifications

Models	Scale Sizes	
AX1	7"	Rigid Straight
BX1	9"	
CX1	12"	
AX2	7"	Rigid 90° Angle
BX2	9"	
CX2	12"	

Fill Type	Spirit: Blue colored, organic
Case	Cast Aluminum, blue epoxy finish
Stem	Aluminum, brass, 304 stainless steel
Connection	1 1/4 -18 UNEF-2A coupling nut
Window	Ultraviolet protective acrylic on ranges to 300° F Glass on ranges over 300° F
Tube	Lens front, magnifying type
Scale	Aluminum, white background with black graduations and markings
Top Plate	ABS
Accuracy	±1 scale division

Approximate Shipping Weight

AX1: 1.2 lbs [0.55 kg]
BX1: 1.4 lbs [0.64 kg]
CX1: 1.8 lbs [0.82 kg]
AX2: 1.0 lbs [0.45 kg]
BX2: 1.3 lbs [0.59 kg]
CX2: 1.7 lbs [0.77 kg]

HOW TO ORDER

Sample Order Number: **CX1 2 406 15**

Model	Stem (Material)	Stem (Length)	Specific Range
AX1 7" Rigid Straight **BX1** 9" Rigid Straight **CX1** 12" Rigid Straight **AX2** 7" Rigid 90° Angle **BX2** 9" Rigid 90° Angle **CX2** 12" Rigid 90° Angle	**1** Aluminum **2** Brass **3** 304 SS	**403** 3 1/2" **406** 6" **408** 8" **512** 12"	See Standard Ranges

12950 W. Eight Mile Road • Oak Park, MI 48237-3288 • TEL:248/399-8000 • FAX: 248/399-7246 • www.TRERICE.com

Rigid Stem

All dimensions are nominal.
Dimensions in [ ] are in millimeters.

Rigid-Straight

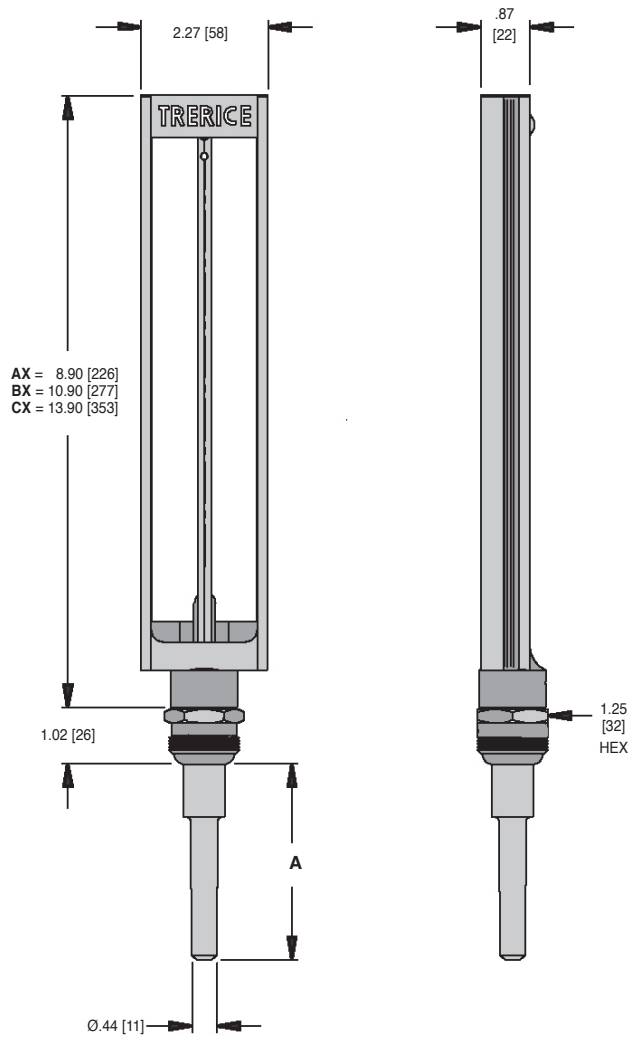

Rigid-90° Angle

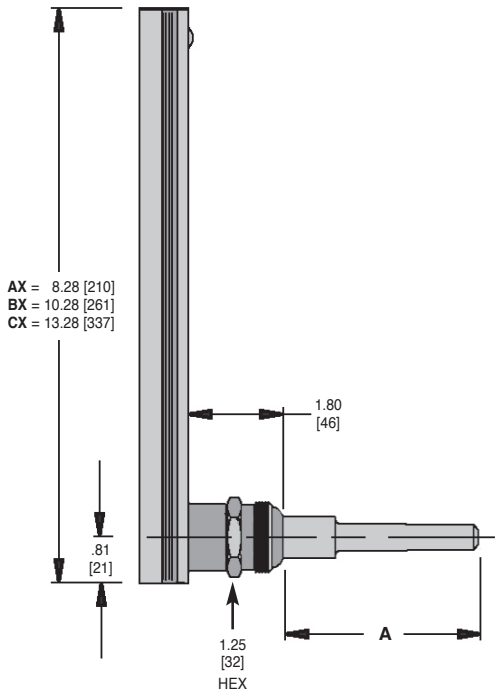

(A) Stem Length	Dimension	
3 1/2"	3.50	[88.9]
6"	6.00	[152.4]
8"	8.00	[203.2]
12"	12.00	[304.8]

Standard Ranges

Fahrenheit Scale		Celsius Scale		Dual Scale		Fahrenheit		Celsius	
Range Code	Range	Range Code	Range	Range Code	Range	Figure Intervals	Minor Divisions	Figure Intervals	Minor Divisions
01	–40° to 110°F	17	–40° to 40°C	41	–40° to 110°F & –40° to 40°C	10°	2°	5°	1°
02	0° to 100°F	24	–18° to 38°C	42	0° to 100°F & –18° to 38°C	5°	1°	5°	0.5°
03	30° to 130°F	25	0° to 55°C	43	30° to 130°F & 0° to 55°C	5°	1°	5°	1°
04	0° to 160°F	26	–18° to 70°C	44	0° to 160°F & –18° to 70°C	10°	2°	5°	1°
06	30° to 180°F	27	0° to 83°C	46	30° to 180°F & 0° to 83°C	10°	2°	5°	1°
07	30° to 240°F	19	0° to 115°C	47	30° to 240°F & 0° to 115°C	10°	2°	5°	1°
08	30° to 300°F	20	0° to 150°C	48	30° to 300°F & 0° to 150°C	10°	2°	10°	2°
09	50° to 400°F	28	10° to 205°C	49	50° to 400°F & 10° to 205°C	25°	5°	10°	2°
15	50° to 500°F	31	10° to 260°C	55	50° to 500°F & 10° to 260°C	25°	5°	10°	2°

Dual scale figure intervals may differ

12950 W. Eight Mile Road • Oak Park, MI 48237-3288 • TEL:248/399-8000 • FAX: 248/399-7246 • www.TRERICE.com